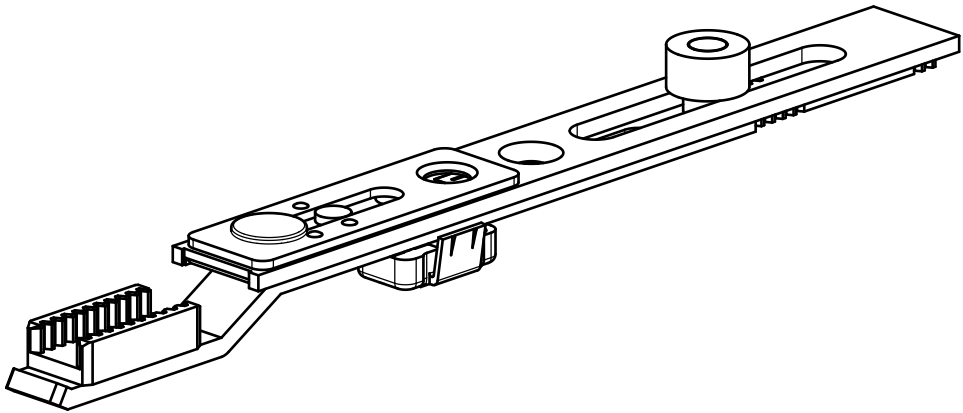

6-33822-00-0		
Scale 1:1		
Draft	18.10.2024	Hp